US005269275A

United States Patent [19]

Dahlgren

[11] Patent Number: 5,269,275

[45] Date of Patent: Dec. 14, 1993

[54] PULSE WIDTH MODULATED CONTROLLER FOR NITROUS OXIDE AND FUEL DELIVERY

[75] Inventor: David Dahlgren, 2 Ashby St., Mystic, Conn. 06355

[73] Assignees: David Rook, Hempstead, N.Y.; David Dahlgren, Mystic, Conn.

[21] Appl. No.: 970,395

[22] Filed: Nov. 2, 1992

[51] Int. Cl.[5] F02B 75/12

[52] U.S. Cl. ..... 123/492; 123/1 A

[58] Field of Search ..... 123/1 A, 492, 478

[56] References Cited

U.S. PATENT DOCUMENTS

4,494,488	1/1985	Wheatley	123/1 A
4,572,140	2/1986	Wheatley	123/1 A
4,683,843	8/1987	Norcia et al.	123/1 A
4,688,522	8/1987	McMaster	123/1 A
4,798,190	1/1989	Vaznaian et al.	123/1 A
4,840,157	6/1989	Furrow	123/1 A
4,955,348	9/1990	Budde et al.	123/478
5,088,464	2/1992	Meaney	123/478
5,091,858	2/1992	Paielli	123/480
5,174,263	12/1992	Meaney	123/478

OTHER PUBLICATIONS

"Thunder Twin Fuel Injection by Accel", promotional brochure, Accel Motorcycle Products, Branford, Conn. (no date).

"Thunder Twin Fuel Injection", Owner's Manual, Accel Motorcycle Product, Branford, Conn., 1991.

Calmap 6.0 Instructions.

Primary Examiner—E. Rollins Cross
Assistant Examiner—Erick Solis
Attorney, Agent, or Firm—Galgano & Belkin

[57] ABSTRACT

A pulse width modulated controller for N_2O and enrichment fuel delivery includes a system control logic section which processes signals from sensors for throttle position, engine speed and a number of other user-selectable parameters and a driver section controls electrically operated injectors or solenoid valves. The driver section allows the injectors to open only when all of the parameters sensed in the control section are met. Moreover, the driver section activates injectors according to a pulse generated by a pulse width modulation section which determines how long the injectors will remain activated. The pulse width modulation section receives signals based on the present throttle position and engine speed and adjusts these values according to values for N_2O and enrichment fuel based on engine speed and throttle position set by the user in a tuning section and thereby continuously provides the driver section with a pulse having a width proportional to the proper amount of N_2O and enrichment fuel which should be delivered at any given time. In addition, the tuning section is also user-settable to a maximum ignition timing adjustment and provides a signal proportional to ignition timing retard to an ignition control section for automatically adjusting ignition timing according to the amount of N_2O and enrichment fuel being delivered at any given moment.

8 Claims, 6 Drawing Sheets

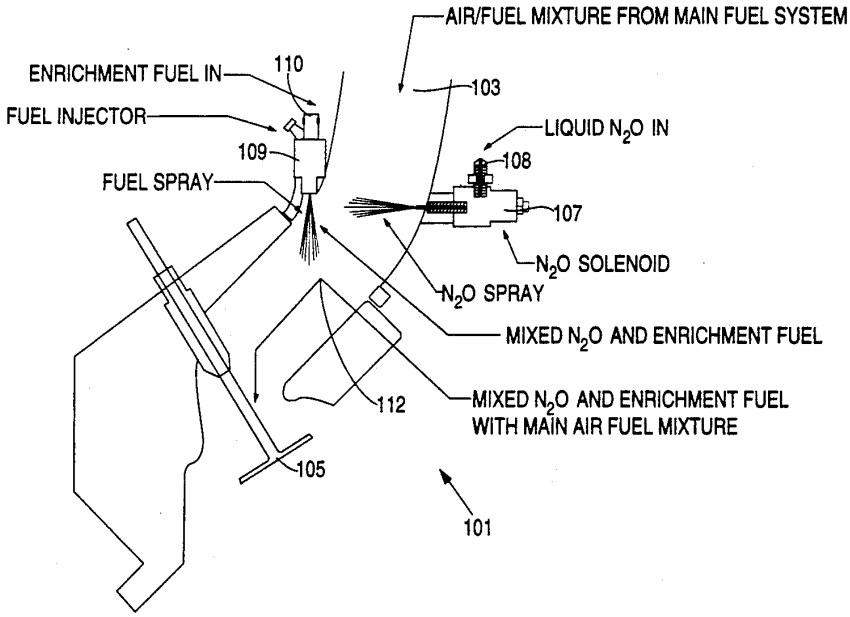

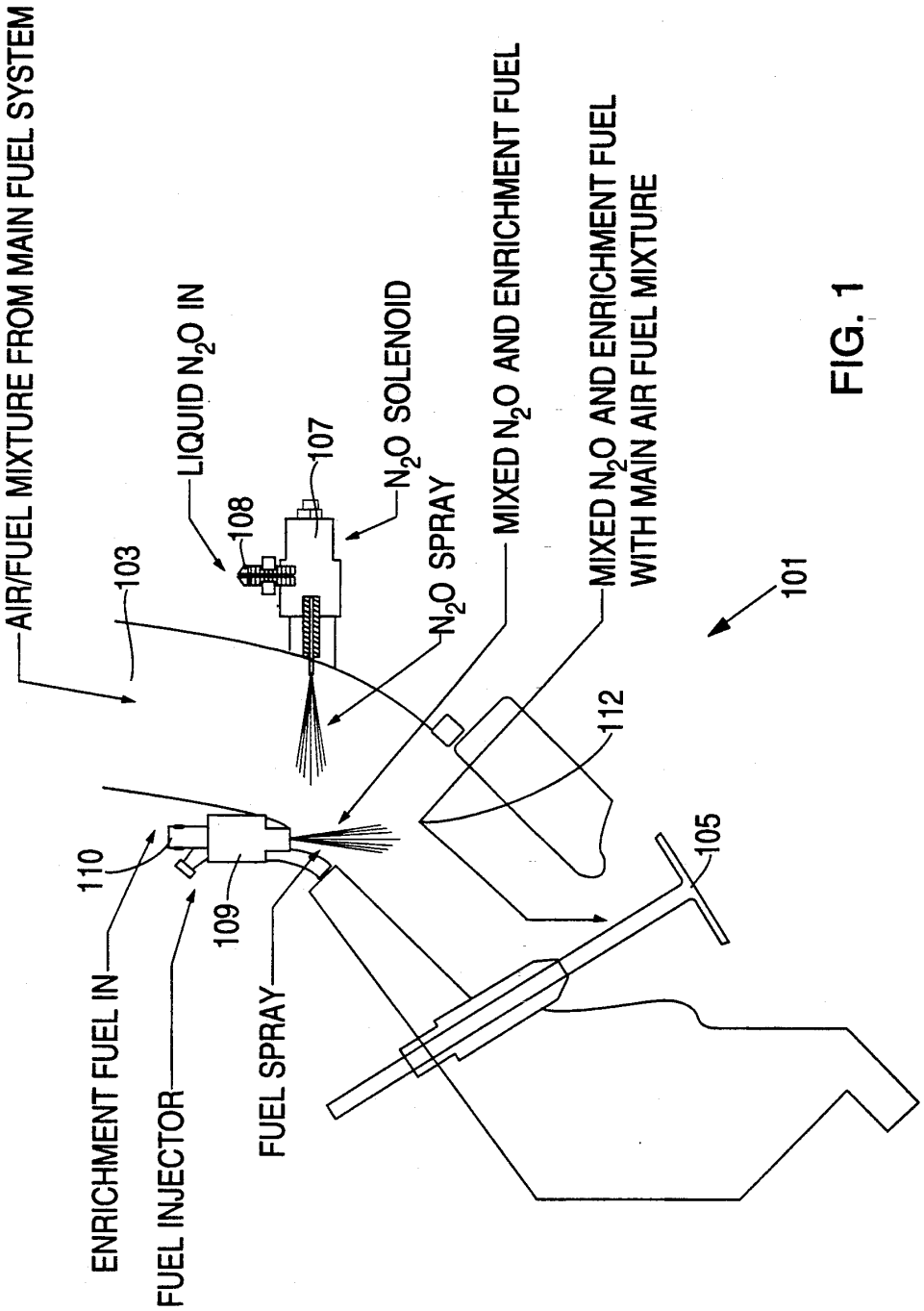
AIR/FUEL MIXTURE FROM MAIN FUEL SYSTEM
103
LIQUID N_2O IN
108
107
N_2O SOLENOID
N_2O SPRAY
MIXED N_2O AND ENRICHMENT FUEL
MIXED N_2O AND ENRICHMENT FUEL WITH MAIN AIR FUEL MIXTURE
101
112
105
110
109
ENRICHMENT FUEL IN
FUEL INJECTOR
FUEL SPRAY

FIG. 1

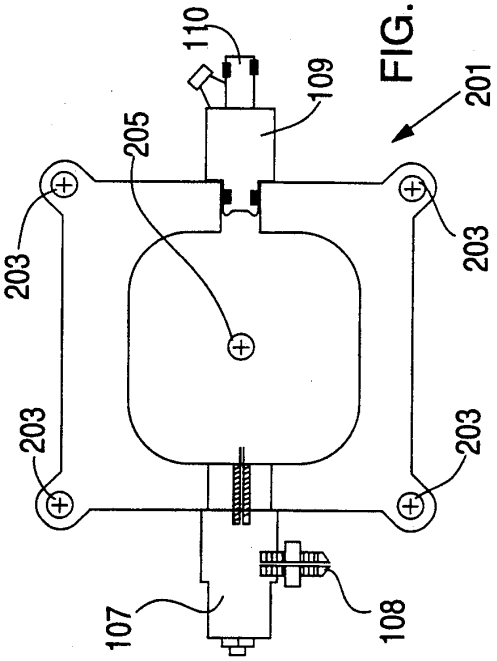
110
109
201
205
203
203
203
203
107
108

FIG. 2A

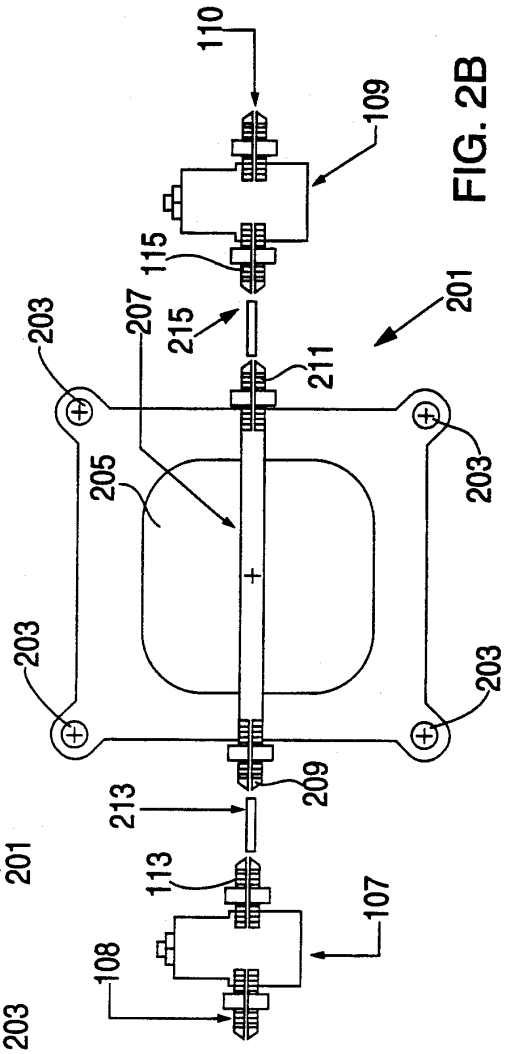
110
109
115
207
215
201
211
203
205
203
203
203
209
213
113
107
108

FIG. 2B

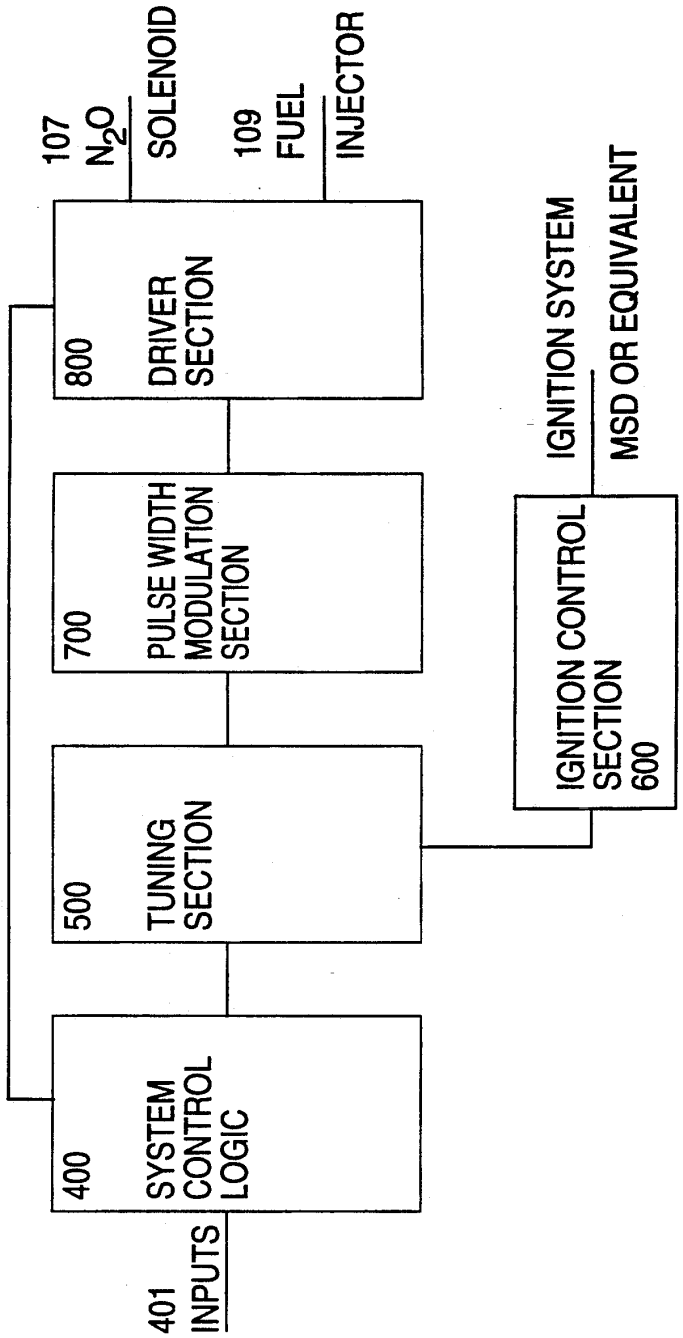
107
N_2O
SOLENOID
109
FUEL
INJECTOR
800
DRIVER SECTION
700
PULSE WIDTH MODULATION SECTION
500
TUNING SECTION
400
SYSTEM CONTROL LOGIC
401
INPUTS
IGNITION SYSTEM
MSD OR EQUIVALENT
IGNITION CONTROL SECTION 600

FIG. 3

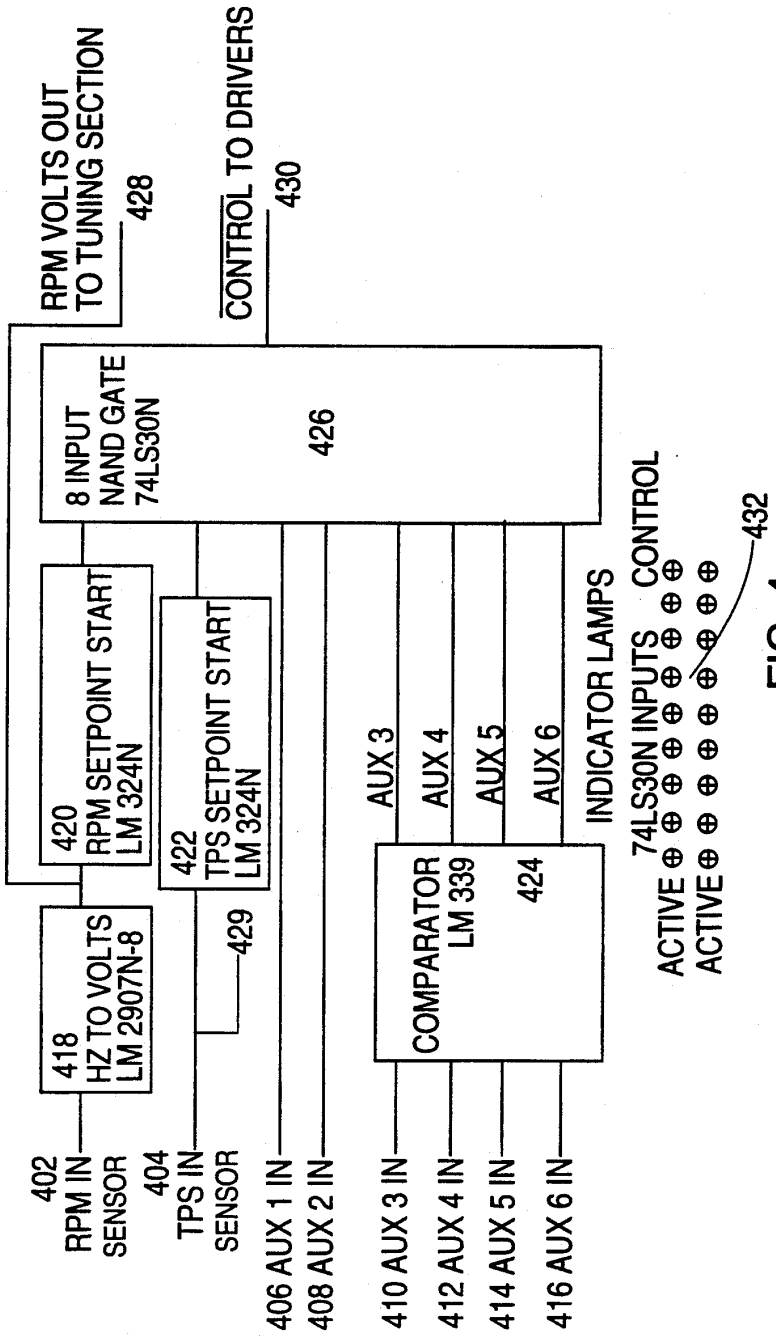
RPM VOLTS OUT
TO TUNING SECTION
428
CONTROL TO DRIVERS
430
8 INPUT
NAND GATE
74LS30N
426
420
RPM SETPOINT START
LM 324N
422
TPS SETPOINT START
LM 324N
418
HZ TO VOLTS
LM 2907N-8
429
COMPARATOR
LM 339
424
AUX 3
AUX 4
AUX 5
AUX 6
INDICATOR LAMPS
74LS30N INPUTS
CONTROL
ACTIVE
ACTIVE
432
402
RPM IN
SENSOR
404
TPS IN
SENSOR
406 AUX 1 IN
408 AUX 2 IN
410 AUX 3 IN
412 AUX 4 IN
414 AUX 5 IN
416 AUX 6 IN

FIG. 4

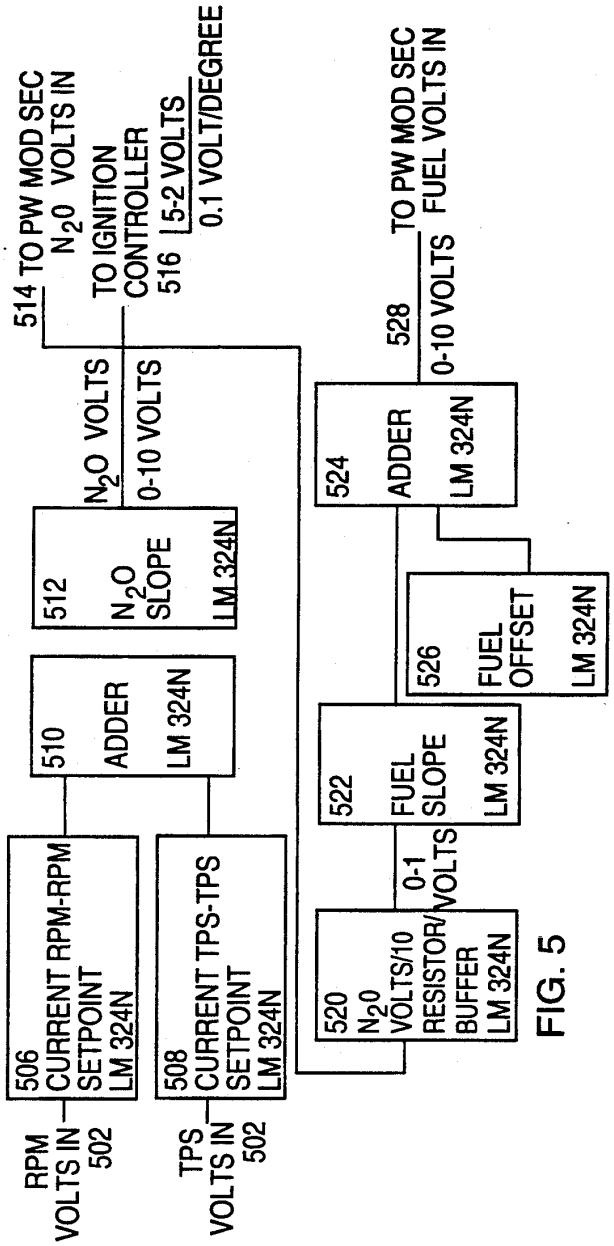
RPM VOLTS IN 502
TPS VOLTS IN 502
506 CURRENT RPM-RPM SETPOINT LM 324N
508 CURRENT TPS-TPS SETPOINT LM 324N
510 ADDER LM 324N
512 N_2O SLOPE LM 324N
N_2O VOLTS
0-10 VOLTS
514 TO PW MOD SEC N_2O VOLTS IN
TO IGNITION CONTROLLER 516
5-2 VOLTS
0.1 VOLT/DEGREE
520 N_2O VOLTS/10 RESISTOR/ BUFFER LM 324N
0-1 VOLTS
522 FUEL SLOPE LM 324N
524 ADDER LM 324N
526 FUEL OFFSET LM 324N
528 TO PW MOD SEC FUEL VOLTS IN
0-10 VOLTS

FIG. 5

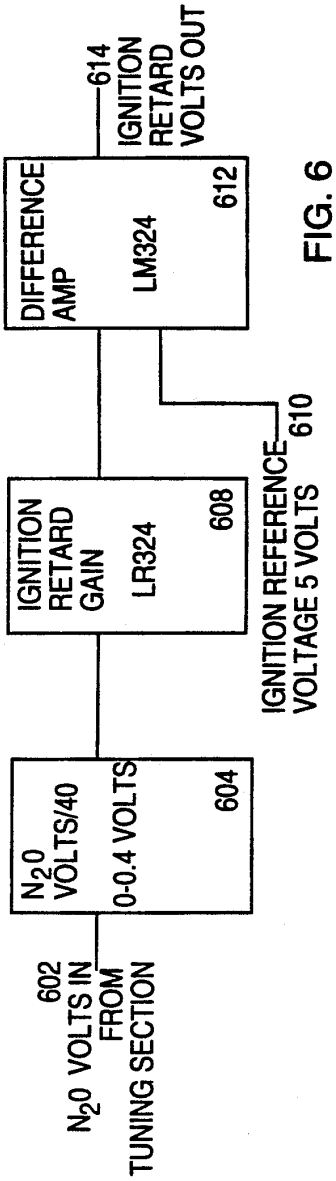
602 N_2O VOLTS IN FROM TUNING SECTION
N_2O VOLTS/40 0-0.4 VOLTS 604
IGNITION RETARD GAIN LR324 608
IGNITION REFERENCE VOLTAGE 5 VOLTS 610
DIFFERENCE AMP LM324 612
614 IGNITION RETARD VOLTS OUT

FIG. 6

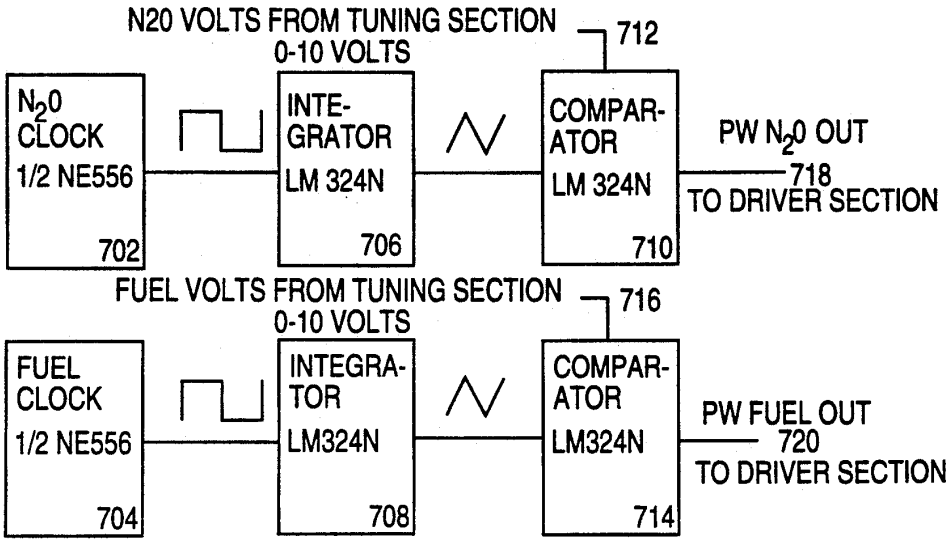
N20 VOLTS FROM TUNING SECTION
0-10 VOLTS
712
N_2O CLOCK
1/2 NE556
702
INTE-GRATOR
LM 324N
706
COMPAR-ATOR
LM 324N
710
PW N_2O OUT
718
TO DRIVER SECTION
FUEL VOLTS FROM TUNING SECTION
0-10 VOLTS
716
FUEL CLOCK
1/2 NE556
704
INTEGRA-TOR
LM324N
708
COMPAR-ATOR
LM324N
714
PW FUEL OUT
720
TO DRIVER SECTION

FIG. 7

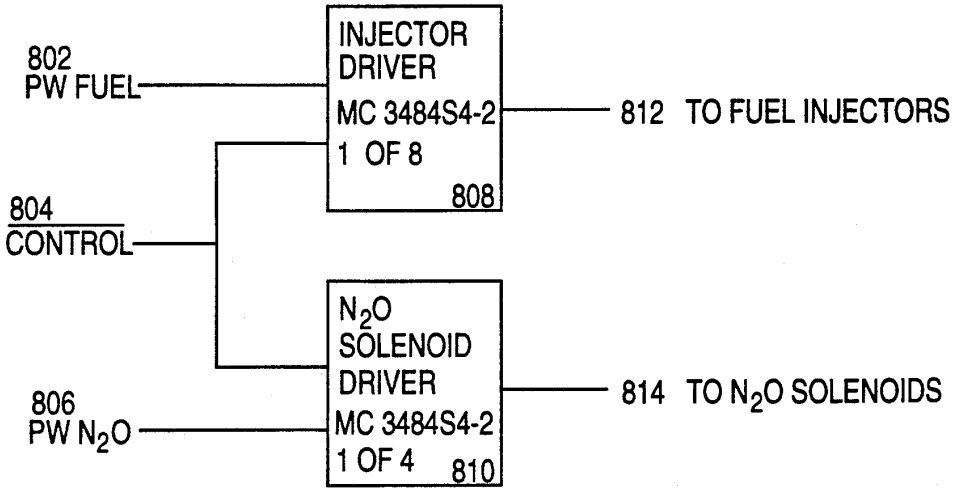
802
PW FUEL
INJECTOR DRIVER
MC 3484S4-2
1 OF 8
808
812 TO FUEL INJECTORS
804
CONTROL
N_2O SOLENOID DRIVER
MC 3484S4-2
1 OF 4
810
806
PW N_2O
814 TO N_2O SOLENOIDS

FIG. 8

PULSE WIDTH MODULATED CONTROLLER FOR NITROUS OXIDE AND FUEL DELIVERY

FIELD OF THE INVENTION

The present invention relates to automotive fuel injection systems. More particularly, the invention relates to a system for injecting liquid nitrous oxide and enrichment fuel in a high performance vehicle.

BACKGROUND OF THE INVENTION

Chemical supercharging of racing engines is well known in the art. Nitrous oxide (N_2O) is a non-flamable liquid/gas used for such chemical supercharging which when introduced into the combustion chamber of an engine breaks down into its components of nitrogen and oxygen. The free oxygen is then available to oxidize additional fuel ("enrichment fuel") that is supplied to the engine and mixed with the oxygen resulting in a large increase in power. N_2O injection or charging is usually performed only at critical periods of a race to provide a sudden burst of power since the amount of N_2O injected is difficult to meter and the use of N_2O can be hazardous if too much N_2O is injected.

N_2O charging or injecting systems usually consist of a cylinder or container holding a supply of liquid N_2O under pressure, typically 900 psi. The N_2O supply is connected by a conduit to a solenoid actuated valve at the carburetor of the engine. The solenoid actuator is operated by the driver from within the vehicle at the instant that a sudden burst of power is required. The N_2O supply container is usually quite small due to weight and space limitations in racing vehicles. This present several problems: the pressure in the small container drops quickly once the solenoid actuated valve is opened and thus affects the amount of N_2O injected. Since an improper mixture of oxygen and fuel will actually decrease performance, N_2O injection can only last a few seconds.

The actual amount of N_2O which should be injected is a function of engine speed (RPM) and if too little N_2O is injected, the performance increase is limited. Moreover, if too much N_2O is injected, the engine will be seriously damaged.

Several systems have been proposed for controlling and/or automating N_2O injection. U.S. Pat. No. 4,494,488 to Wheatley discloses a "Fuel Charging System for High Performance Vehicles" which includes a supply cylinder of pressurized liquid N_2O connected by an outlet conduit to the vehicle engine. A second cylinder of nitrogen gas under a considerably higher pressure is connected to the N_2O cylinder through a pressure regulator. The nitrogen gas maintains a high pressure blanket over the N_2O to force the N_2O into the engine at a relatively constant and sustained rate. This results in an additional several seconds during which N_2O injection may be performed.

U.S. Pat. No. 4,683,843 to Norcia et al discloses a "Nitrous Oxide Fuel Injection Safety System" which includes a container of pressurized N_2O supplied to the engine through a spray bar. The supply line is also connected to a vent tube having a normally open solenoid valve communicating with a one-way low pressure actuated check valve to prevent excess buildup of N_2O in the engine. A pair of pressure actuated electrical switches are connected to and actuated by pressure of oil and fuel to stop N_2O injection when there is insufficient fuel to mix with the N_2O and to prevent N_2O injection when RPM is too low.

All of the known systems for injecting N_2O have one common disadvantage. N_2O is injected in a predetermined amount for a predetermined time only. These systems do not control the amount of N_2O injection over time, but rather control the amount of N_2O injection at a specific time. N_2O injection is still limited to a brief moment of increased power rather than a continuous span of increasing power.

Moreover, it is known in the art that during N_2O and enrichment fuel injection, ignition timing should be retarded by 4°–10°. However, only a few systems include provisions for adjusting ignition timing during N_2O injection.

Electronically controlled fuel injection systems have been widely used in normal gasolene and diesel powered engines. One such system is sold by Haltech, Inc. of Garland, Tex. The Haltech TM F3 electronic fuel injection system includes sensors for air temperature, engine temperature, throttle position, engine rpm and manifold vacuum and a programmable controller so that the amount of fuel applied to combustion chambers is metered in steps according to information gathered by the sensors. Specifically, this system allows programming of 64 different vacuum/pressure adjustments to map fuel delivery over the range of engine speeds. It is only recently, however, that this technology has been applied to N_2O fuel injection systems.

Nitrous Oxide Systems of Cypress, Calif. has combined features of electronic fuel injection technology with N_2O injection systems to control N_2O boost according to throttle position and temperature and to "ramp" N_2O injection for a more even boost when N_2O injection is activated.

To date, however, these electronically controlled N_2O injection systems operate in a relatively static manner, requiring the user to pre-program the system with a personal computer according to certain parameters which will be followed by the system during activation of N_2O injection.

Recently, Jacobs Electronics of Midland, Tex. has introduced the "Nitrous Mastermind" (NMM) system. This system allows the user to present the rpm at which N_2O injection begins and at which N_2O injection reaches 100%. The NMM system begins N_2O injection at 40–50% and increases injection to 100% over a straight line proportional to the selected engine speeds. The system also includes several safety features such as an automatic shut-off when fuel pressure falls and/or rpm drops. The NMM system also includes an ignition timing retard adjustment which retards ignition timing 4°–10° during N_2O injection.

The NMM system does not, however, account for throttle position as a factor in considering the amount of N_2O injection. It does not allow the adjustment of offset or slope in plotting the N_2O injection curve. In fact, the NMM system does not plot an injection curve but uses a straight line "in direct proportion to the engine rpm".

SUMMARY OF THE INVENTION

It is an object of the present invention to provide an electronic control system for N_2O and enrichment fuel delivery which automatically controls the rate of N_2O and enrichment fuel delivery according to rpm, throttle position, oil pressure, and fuel pressure.

It is also an object of the invention to provide a simple means for adjusting the starting point of N_2O and

enrichment fuel injection and the slope of the delivery curve without requiring complicated programming of the system.

It is another object of the invention to link N_2O injection and enrichment fuel injection so that the proper ration of N_2O/enrichment fuel is always maintained.

It is still another object of the invention to automatically adjust ignition timing by as much as 20° to compensate for N_2O injection.

It is also an object of the invention to provide a gradual injection of N_2O and enrichment fuel for a predictable increase in power.

It is another object of the invention to provide for auxiliary inputs so that injection of N_2O and enrichment fuel may be controlled according to a number of user-selected additional parameters including safety devices to automatically shut down N_2O injection upon the sensing of any particular condition.

It is yet another object of the invention to create a "universal stand-alone" system which is not limited to the number of cylinders, N_2O injectors, fuel injectors, or electrical current capacity which will work in an automobile, a boat, a plane or a stationary engine with carburetors or fuel injection, either 2 stroke or 4 stroke, rotary, diesel, gasoline, LPG, natural gas, or alcohol powered.

These objects and others are achieved by a pulse width modulated controller for N_2O and enrichment fuel delivery where a plurality of inputs including throttle position and engine speed are combined to determine the starting point of N_2O and enrichment fuel injection; where the throttle position and engine speed are constantly monitored and the amount of N_2O and enrichment fuel delivered to the engine is increased automatically as throttle position and engine speed increase; and where ignition timing is automatically adjusted in proportion to the amount of N_2O and enrichment fuel delivered to the engine.

In accord with the invention, the preferred pulse width modulated controller for N_2O and enrichment fuel delivery includes a system control logic section where signals from sensors for throttle position, engine speed and a number of other user-selectable parameters are combined and sent to a driver section which controls electrically operated injectors or solenoid valves. The driver section allows the injectors to open only when all of the parameters sensed in the control section are met. Moreover, the driver section activates injectors according to a pulse generated by a pulse width modulation section which determines how long the injectors will remain activated. The pulse width modulation section receives signals based on the present throttle position and engine speed and adjusts these values according to values for N_2O and enrichment fuel based on engine speed and throttle position set by the user in a tuning section and thereby continuously provides the driver section with a pulse having a width proportional to the proper amount of N_2O and enrichment fuel which should be delivered at any given time. Moreover, the tuning section which monitors engine speed and throttle position and has been set with amounts of N_2O and enrichment fuel deliverable accordingly, is also user-settable to a maximum ignition timing adjustment and provides a signal proportional to ignition timing retard to an ignition control section for automatically adjusting ignition timing according to the amount of N_2O and enrichment fuel being delivered at any given moment.

BRIEF DESCRIPTION OF THE DRAWING

With these and other objects in view, which will become apparent in the following detailed description, the present invention, which is shown by example only, will be clearly understood in connection with the accompanying drawing, in which:

FIG. **1** is a cross sectional schematic view of a fuel intake passage with injectors for enrichment fuel and N_2O.

FIGS. **2***a* and **2***b* are plan schematic views of modified carburetor plates with enrichment fuel and N_2O injectors.

FIG. **3** is a block diagram of the electronic control system of the invention.

FIG. **4** is a block diagram of the system control logic section of the electronic control system of FIG. **3**.

FIG. **5** is a block diagram of the system tuning section of the electronic control system of FIG. **3**.

FIG. **6** is a block diagram of the ignition control section of the electronic control system of FIG. **3**.

FIG. **7** is a block diagram of the pulse width modulation section of the electronic control system of FIG. **3**.

FIG. **8** is a block diagram of the driver section of the electronic control system of FIG. **3**.

DESCRIPTION OF THE PREFERRED EMBODIMENTS

Turning now to FIG. **1**, an intake passage **101** of an engine is shown in the vicinity of intake valve **105**. There is typically one such intake passage for each cylinder in the engine. Normally, an air/fuel mixture **103** enters the intake passage upstream of the intake valve **105** from the main fuel system of the engine (not shown). In FIG. **1**, the intake passage **101** is modified to include a solenoid operated N_2O injector **107** and an enrichment fuel injector **109**. Injectors **109** and **107** are coupled through connections **110**, **108** to respective sources of enrichment fuel and N_2O (not shown) and are controlled by the electronic control system of the invention which is described in detail below. When activated by the control system of the invention, injectors **109**, **107** inject measured amounts of enrichment fuel and N_2O which are mixed together with each other and with the air/fuel mixture **103** at a point **112** downstream of the injectors but still upstream of the intake valve **105**. The installation of separate enrichment fuel and N_2O injectors at each intake passage is the preferred method of utilizing the electronic control system of the invention. However, it is possible to use the invention with a single enrichment fuel injector and a single N_2O injector in a carbureted engine.

FIGS. **2***a* and **2***b* show two arrangements for using a single enrichment fuel injector and a single N_2O injector in a carbureted engine. FIG. **2***a* shows a carburetor spacer plate **201** having a bolt patern **203** to match a particular carburetor. Intake manifold **205** receives a mixture of air and fuel from the carburetor (not shown). An enrichment fuel injector **109** and a N_2O solenoid valve (injector) **107** are mounted opposite each other in the sides of the spacer plate **201**. The injectors **107**, **109** are coupled via connections **108**, **110** to respective supplies of N_2O and enrichment fuel (not shown) and are activated by the electronic control system described below.

FIG. **2***b* shows an alternative embodiment to the arrangement shown in FIG. **2***a*. Here, a carburetor spacer plate **201** with a bolt pattern **203** matching a

particular carburetor is provided with a spray bar **207** passing through the intake manifold **205**. The spray bar is provided with couplings **209, 211** for connection with connecting lines **213, 215** which in turn are coupled via connections **113, 115** with N_2O solenoid valve **107** and enrichment fuel solenoid valve **109**. Valves **107, 109** are coupled via connections **108, 110** to respective supplies of N_2O and enrichment fuel (not shown) and are activated by the electronic control system described below.

The inventive control circuit for activating N_2O and enrichment fuel injectors (or solenoid valves) is shown and described with reference to FIGS. **3–8**. Turning now to FIG. **3**, the basic components of the control system are shown in a block diagram. A variety of inputs **401**, which are described in detail below, supply signals to the system control logic **400** which combines these signals to determine a threshold condition upon which injection will begin and provides signals for the tuning section **500** and the driver section **800**. The tuning section **500** takes signals from the system control logic and processes these signals according to user-set parameters. The processed signals from the tuning section **500** are sent to the ignition control section **600** and the pulse width modulation section **700**. The ignition control section **600** generates a signal to retard ignition timing depending on the signals it receives from the tuning section **500**. The pulse width modulation section **700** includes a clock generator and compares signals from the tuning section with integrated clock pulses to supply the driver section **800** with a pulse of variable width to control the duration of N_2O and enrichment fuel injection. The driver section **800** takes the pulses from the pulse width modulation section **700** and control signals from the system control logic **400** to provide driving signals to actuate the N_2O and enrichment fuel solenoids **107** and **109**.

FIG. **4** shows a block diagram of the details of the system control logic **400** of FIG. **3**. In this figure, eight inputs are shown, but only two of these inputs are critical. Input **402** accepts a signal in Hz describing engine RPM. Input **404** accepts a signal in volts referencing throttle position. These inputs are used to decide when the system is to begin operation. Input **402** in Hz is converted to volts at **418**. This voltage is supplied by output **428** to the tuning section **500** (described below) and also compared to a setpoint at **420**. This setpoint is adjustable by the user to indicate at what RPM voltage the system should begin N_2O and enrichment fuel injection. Similarly, input **404** is supplied by output **429** to the tuning section **500** (described below) and also is compared to a user-adjustable stepoint at **422** to determine at what throttle position voltage the system should start N_2O and enrichment fuel injection. A number of other inputs may be combined with these to determine a particular combination of threshold factors which will govern the start of N_2O and enrichment fuel injection. As shown in FIG. **4**, inputs **406** and **408** will accept a positive voltage as an active condition and inputs **410, 412, 414**, and **416** will accept a signal that goes to ground as an active condition. These six AUX inputs are included as an option for special requirements of a particular user and will be jumpered out if not used. It is contemplated that these inputs be used for sensors such as fuel pressure, oil pressure, engine temperature, overspeed, engine knock sensor, transmission gear engaged, wheel spin (comparison of front and rear wheel speed), N_2O pressure, trans brake/line lock, or a system arming switch. As shown in FIG. **4**, these inputs may pass through a comparator **424** to set a voltage threshold for a valid condition that is above the electrical noise that may be present on the inputs and eliminate the potential problem of a false "ON" condition.

All of the inputs are subjected to NAND gate **426** and the resulting control signal **430** to the driver section **800** (described below) is true (low) only when all inputs are true, resulting in no possibility of injection unless all inputs are true.

The system control section may also be provided with a number of indicator lights **432** which indicate the status of all inputs and the status of the control output.

Turning now to FIG. **5**, the system tuning section includes input **502** for RPM voltage as supplied by output **428** from the system control logic described above with reference to FIG. **4** and an input for throttle position voltage **504** as supplied by output **429** from the system control logic described above with reference to FIG. **4**. These voltages are subtracted from the set-point values by opamps at **506** and **508** respectively to produce a value of 0 volts at the system start. As engine speed and throttle position increase, these voltages increase and they are summed by adder **510**. The sum of these voltages is then multiplied by a user-set factor at opamp **512** to determine the rate of power increase. This multiplied voltage is then supplied to three places: the pulse width modulation section **700** (described below) through output **514**, the ignition control section **600** through output **516**, and to an opamp **520** to control the rate of enrichment fuel which will compliment the N_2O injection. The enrichment fuel signal from opamp **520** is multiplied at **522** to a rate of injection and can be added at **524** to an initial rich fuel condition as supplied by user-set fuel offset value **526**. The resultant enrichment fuel voltage signal is output at **528** to the pulse width modulation section **700** (described below).

Turning now to FIG. **6**, the ignition control section includes input **602** for N_2O volts as supplied by output **516** from the system tuning section described above with reference to FIG. **5**. This input represents the percentage of N_2O that is presently being injected. The input **602** is first scaled to a fraction of its value and then scaled by a user selectable multiple at **608** to the total amount of desired ignition spark retard. This scaled voltage is then compared at **612** with a reference of 5 volts resulting in an output voltage of 0–5 volts which is compatible with ignition timing spark controllers manufactured by Automatic Controls of El Paso, Tex.

Turning now to FIG. **7**, the pulse width modulation section includes two clocks **702** and **704** which may be constructed from a single "NE **566**" timer chip having a square wave output. Clock **702** provides a pulse which will be used to drive N_2O injection and clock **704** provides a pulse which will be used to drive enrichment fuel injection. Square waves from clocks **702, 704** are first integrated to saw-tooth waves of the same frequency at **706** and **708** respectively and then each wave is compared at **710** and **716** to voltage outputs from the tuning section which was described above with reference to FIG. **5**. Specifically, the N_2O wave is compared to the N_2O voltage output **514** (FIG. **5**) and the enrichment fuel wave is compared to the enrichment fuel voltage output **528** (FIG. **5**). The resulting outputs **718** and **720** of the pulse width modulation section are square waves with pulse widths proportional to the voltages supplied at comparator inputs **712** and **716** respectively.

Turning now to FIG. 8, the driver section includes pulse width input 802 for enrichment fuel which is supplied by output 720 described above and pulse width input 806 for N_2O which is supplied by output 718 described above. The driver section also receives a control input 804 from output 430 of the system control logic described above with reference to FIG. 4. These inputs are coupled to injector drivers 808 and 810 to control enrichment fuel injectors and N_2O injectors or solenoids. Typically there will be one driver 808 for each enrichment fuel injector and one driver 810 for each N_2O solenoid or injector.

The pulse width modulation controller of the invention operates as follows:

First, the user sets the desired parameters for RPM setpoint and TPS (throttle position setpoint) so that the controller is set as to what engine speed and throttle position injection will begin. Next, the user sets the N_2O slope and the enrichment fuel slope so that the controller is set as to the rate of power increase. Then the user sets the fuel offset to the richness of fuel during startup. For example, a fuel offset of 20% will result in a gentle start on a race track with poor traction while a fuel offset of 0% will result in a hard start on a race track with good traction. Finally, the user sets the maximum amount of ignition spark retard required during maximum N_2O and enrichment fuel injection. Testing has shown that an offset as much as 20 degrees or more may be needed depending on engine output. If there are other devices connected to the system control logic (inputs AUX1–AUX6 in FIG. 4) these may require setting as well.

During operation of the engine, the system control logic (FIG. 4) monitors inputs from RPM, TPS and any other AUX inputs for conditions which signal the start of N_2O and enrichment fuel injection. Typically, this will be a certain RPM and throttle position. Upon detecting the start of injection, a control signal is sent to the drivers (FIG. 8) and voltages proportional to TPS and RPM are sent to the tuning section (FIG. 5). The tuning section applies the slope and the offset for injection, sends voltages proportional to N_2O amount and enrichment fuel amount to the pulse width modulation section (FIG. 7) and sends a voltage proportional to N_2O amount to the ignition control section (FIG. 6). The ignition control section adjusts this voltage according to the user-set ignition retard gain and subtracts a reference voltage so that the output of the ignition control section is within the range of a known ignition timing controller such as those manufactured by Automatic Controls of El Paso, Tex., mentioned above. Typically, the startup flow of N_2O will be 10–18% of the system capacity depending on solenoid valve size. Since throttle position is considered in addition to engine rpm, smooth control can be maintained in a marginal traction situation. If the driver begins to lose traction, a reduction of throttle position can cut the N_2O boost by 20–25% while maintaining substantially constant rpm. Once traction is regained, movement of the throttle position will reapply N_2O boost to the maximum programmed for the rpm and throttle position in question.

Meanwhile, the pulse width modulation section (FIG. 7) compares integrated clock pulses to the voltages for N_2O amount and enrichment fuel amount and outputs square wave pulses for N_2O amount and enrichment fuel amount which have a width proportional to the amount of injection. These pulses are then sent to the driver section (FIG. 8) which includes injector drivers (e.g. Motorola 3484S4-2) for each N_2O and enrichment fuel injector (or solenoid valve). The drivers open the injectors (or solenoids) to inject enrichment fuel and N_2O when the control pulse from the system control logic (FIG. 4) is low and active and for a duration equal to the width of the square wave pulses from the pulse width modulation section (FIG. 7).

Thus, the pulse width modulation control system of the invention continuously adjusts the amount of N_2O and enrichment fuel injection from a preset throttle position and rpm through increasing throttle positions and rpm until 100% of the maximum injection is reached and simultaneously adjusts ignition timing as injection increases.

All of the parts used in the circuit of the invention are readily available from National Semiconductor of Santa Clara, Calif. or from Motorola, Inc. of Phoenix, Ariz. and the part numbers listed in the figures are indicative of these sources. Other parts of the system, such as sensors for rpm and throttle position and the injectors and/or solenoid valves are readily available through a number of sources as are known to those of ordinary skill in the art.

Although the invention is described and illustrated with reference to a plurality of embodiments thereof, it is to be expressly understood that it is in no way limited to the disclosure of such preferred embodiments but is capable of numerous modifications within the scope of the appended claims.

I claim:

1. A pulse width modulated controller for nitrous oxide and enrichment fuel delivery comprising

engine speed sensing means delivering a signal proportional to engine speed;

throttle position sensing means delivering a signal proportional to throttle position;

gate means coupled to said engine speed sensing means and said throttle position sensing means, said gate means generating a binary signal output when a threshold engine speed and throttle position are reached;

a first programmable memory means for storing a value corresponding to rate of nitrous oxide delivery;

a second programmable memory means for storing a value corresponding to rate of enrichment fuel delivery;

a first multiplier means coupled to said first memory means and said engine speed sensing means and said throttle position sensing means for generating a first multiplier output signal proportional to amount of nitrous oxide to be delivered;

a second multiplier means coupled to said second memory means and said engine speed sensing means and said throttle position sensing means for generating a second multiplier output signal proportional to amount of enrichment fuel to be delivered;

a clock means generating a pulse of predetermined frequency;

first comparator means coupled to said clock means and said first multiplier output signal generating a first pulse output having a pulse width proportional to amount of nitrous oxide to be delivered;

second comparator means coupled to said clock means and said second multiplier output signal generating a second pulse output having a pulse

width proportional to amount of enrichment fuel to be delivered;

a nitrous oxide driver means driving a nitrous oxide injector, said nitrous oxide driver coupled to said first pulse output and said binary signal output; and

an enrichment fuel driver means driving an enrichment fuel injector, said enrichment fuel driver coupled to said second pulse output and said binary signal output;

wherein said rate of nitrous oxide delivery and said rate of enrichment fuel delivery are continuously adjusted according to engine speed and throttle position by continuously varying said pulsewidth proportional to the amount of nitrous oxide and said pulsewidth proportional to the amount of enrichment fuel.

2. A pulse width modulated controller for nitrous oxide and enrichment fuel delivery as claimed in claim 1, further comprising

ignition timing control means coupled to said first multiplier output signal.

3. A pulse width modulated controller for nitrous oxide and enrichment fuel delivery as claimed in claim 1, wherein

said gate means includes third programmable memory means for storing a value corresponding to said threshold engine speed and fourth programmable memory means for storing a value corresponding to said threshold throttle position; and

wherein said nitrous oxide and said enrichment fuel are continuously delivered according to said continuously adjusted rates when said threshold engine speed and said threshold throttle position have been reached.

4. A pulse width modulated controller for nitrous oxide and enrichment fuel delivery as claimed in claim 1, wherein

said first multiplier means is coupled to said engine speed sensing means and said throttle position sensing means through an adder.

5. A pulse width modulated controller for nitrous oxide and enrichment fuel delivery as claimed in claim 1, wherein

said second multiplier means is coupled to said engine speed sensing means and said throttle position sensing means through a first adder.

6. A pulse width modulated controller for nitrous oxide and enrichment fuel delivery as claimed in claim 5, further comprising

a fifth programmable memory means for storing a value proportional to initial enrichment fuel richness;

the output of said second multiplier means being coupled to said fifth memory means through a second adder.

7. A pulse width modulated controller for nitrous oxide and enrichment fuel delivery comprising

first sensor means for determining present engine speed;

second sensor means for determining present throttle position;

first memory means for storing a threshold engine speed;

second memory means for storing a threshold throttle position;

first comparator means coupled to said first sensor means and said first memory means for comparing said present engine speed and said threshold engine speed, said first comparator means having a binary output;

second comparator means coupled to said second sensor means and said second memory means for comparing said present throttle position and said threshold throttle position, said second comparator means having a binary output;

'AND' gate means coupled to said first and second comparators, said gate means having a binary control output;

third memory means for storing a nitrous oxide delivery rate;

fourth memory means for storing an enrichment fuel delivery rate;

first multiplier means coupled to said first and second sensor means and said third memory means for generating a signal proportional to amount of nitrous oxide to be presently delivered;

second multiplier means coupled to said first and second sensor means and said fourth memory means for generating a signal proportional to amount of enrichment fuel to be presently delivered;

a nitrous oxide injector driver coupled to a nitrous oxide injector,

an enrichment fuel injector driver coupled to an enrichment fuel injector;

said drivers coupled to said binary control output and said first and second multiplier signals;

wherein said nitrous oxide delivery rate and said enrichment fuel delivery rate are continuously adjusted according to engine speed and throttle position by continuously varying a nitrous oxide injection pulsewidth proportional to the amount of nitrous oxide and a fuel enrichment injection pulsewidth proportional to the amount of enrichment fuel; and

wherein said nitrous oxide and said enrichment fuel are continuously delivered according to said continuously adjusted rates when said threshold engine speed and said threshold throttle position have been reached.

8. A method for controlled delivery of nitrous oxide and enrichment fuel comprising the steps of

preselecting a threshold engine speed and throttle position upon which delivery of nitrous oxide and enrichment fuel will commence;

preselecting a rate of nitrous oxide delivery and a rate of enrichment fuel delivery;

monitoring engine speed and throttle position;

continuously adjusting the preselected rates of nitrous oxide delivery and enrichment fuel delivery according to engine speed and throttle position by continuously varying a nitrous oxide injection pulsewidth proportional to the amount of nitrous oxide and a fuel enrichment injection pulsewidth proportional to the amount of enrichment fuel;

continuously delivering nitrous oxide and enrichment fuel according to said adjusted rates when said threshold engine speed and throttle position have been reached.

* * * * *